SITEK

A BETEK BRAND

SITEK

MILLING CUTTERS

SIMONGROUP

MILLING CUTTERS

SCARIFIER MACHINES

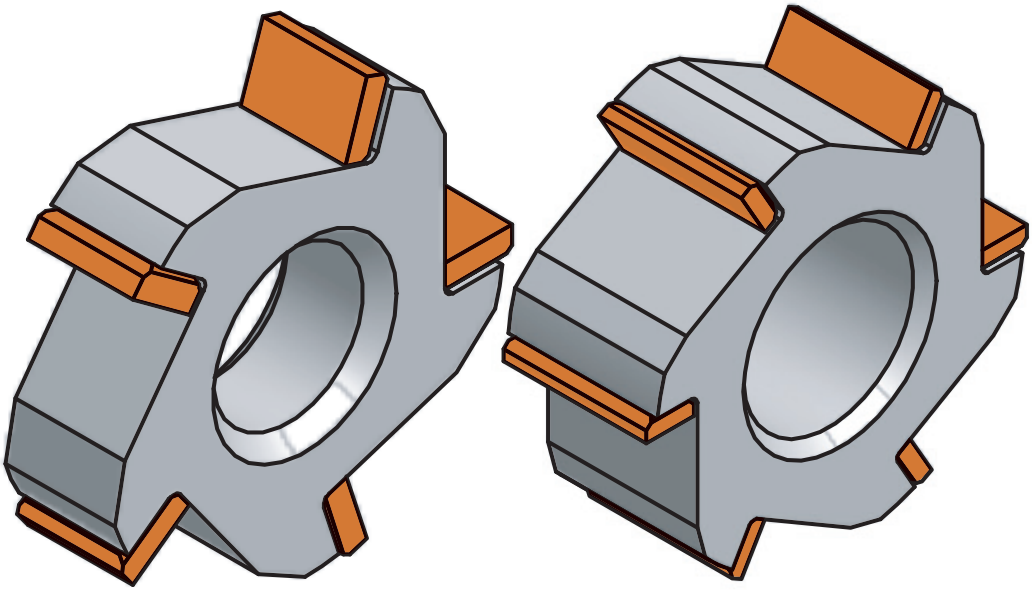

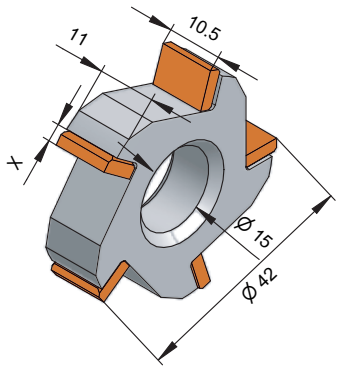

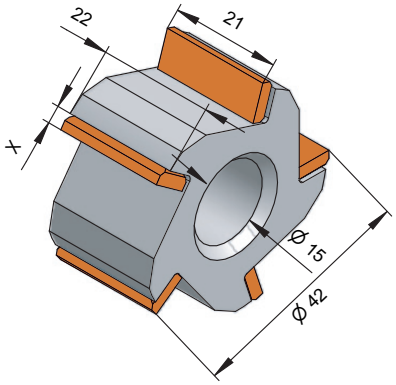

- **MC 5P 42-11/15-2.8**

Article No.	5040094
Thickness of tungsten carbide plate X	2.8

- **MC 5P 42-22/15-2.8**

Article No.	5040194
Thickness of tungsten carbide plate X	2.8

- **MC 5P 42-22/15-3.6**

Article No.	5040193
Thickness of tungsten carbide plate X	3.6

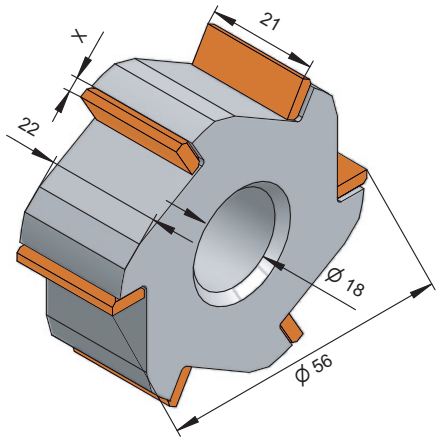

- **MC 6P 56-22/18-2.8**

Article No.	5041294
Thickness of tungsten carbide plate X	2.8

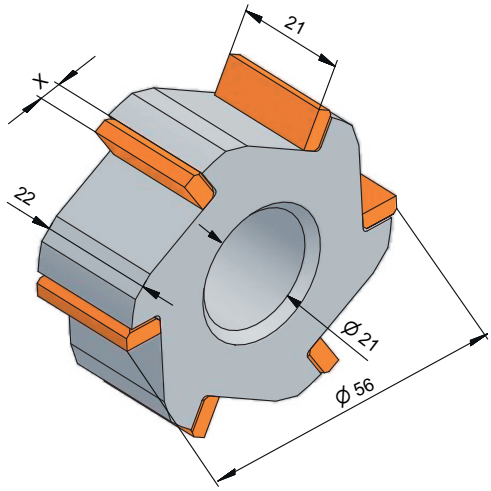

- **MC 6P 56-22/21-3.6**

Article No.	9003933
Thickness of tungsten carbide plate X	3.6

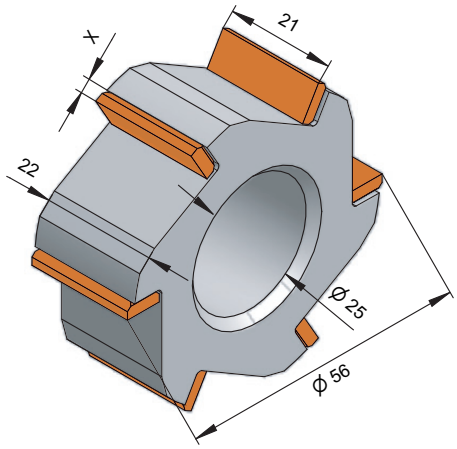

- **MC 6P 56-22/25-2.8**

Article No.	5041394
Thickness of tungsten carbide plate X	2.8

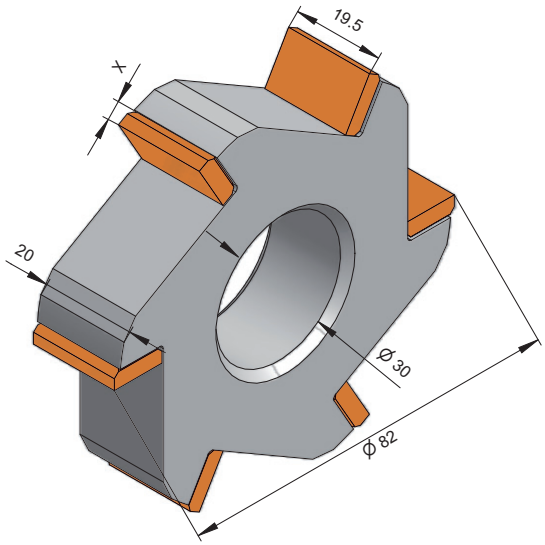

- **MC 6P 82-20/30-4.0**

Article No.	5040204
Thickness of tungsten carbide plate X	4

- **MC 6P 82-20/30-4.8**

Article No.	5040219
Thickness of tungsten carbide plate X	4.8

MILLING CUTTERS

SCARIFIER MACHINES

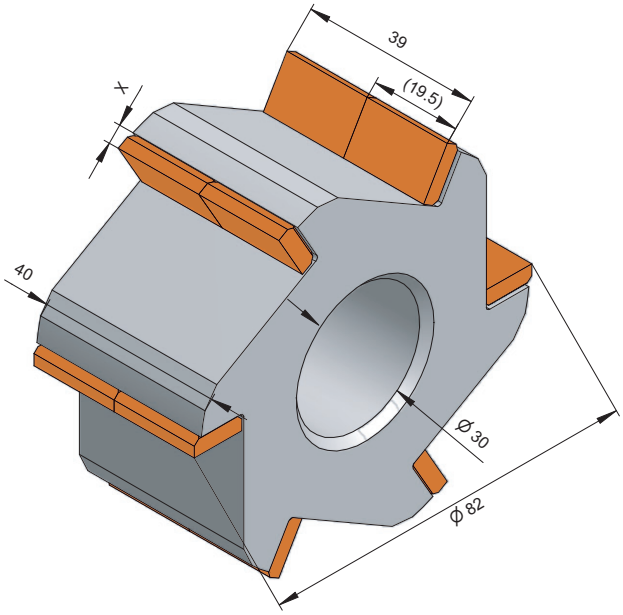

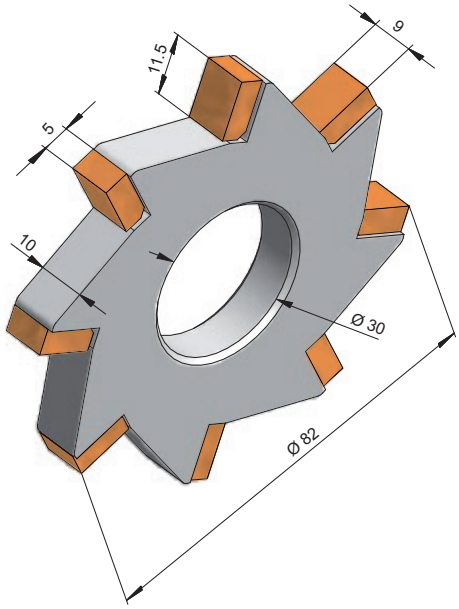

- **MC 6P 82-40/30-4.0**

Article No.	5040404
Thickness of tungsten carbide plate X	4

- **MW 8P 82.5-10-5/30**

Article No.	9001524
Thickness of tungsten carbide plate X	5

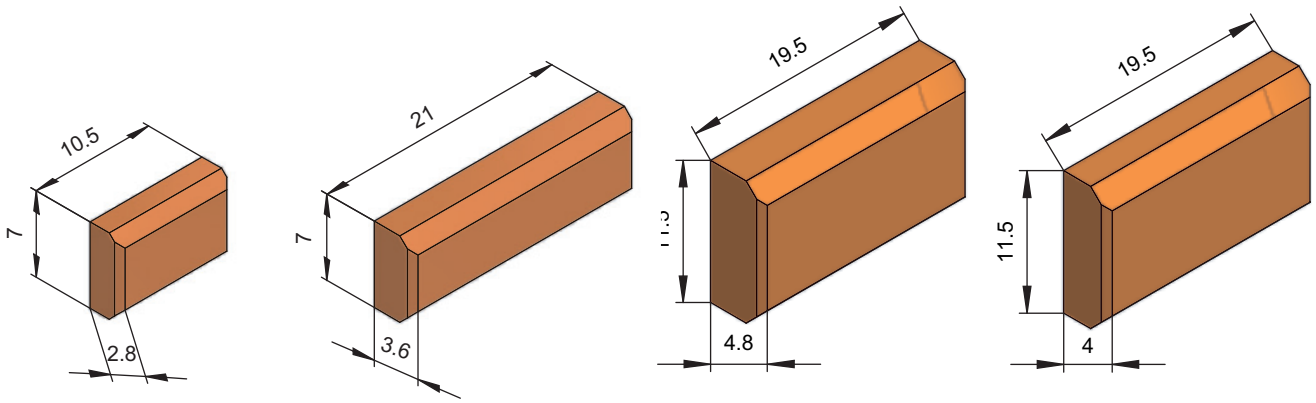

- **Tungsten carbide plates**

SITEK

A BETEK BRAND

SITEK's core competence is in type studs for winter tyres. They provide optimum grip on snow and ice.

Carbide tipped SITEK tools are used to roughen or scour concrete and asphalt surfaces.

SITEK threaded studs and carbide tips for horseshoes provide improved grip on roads, snow and ice

07 / 2023 © BETEK GmbH & Co. KG · 4web· subject to technical modifications ·

BETEKGmbH & Co. KG
Sulgener Str. 21 – 23
D-78733 Aichhalden
Germany

Fon: +49 (0) 74 22 / 5 65-0

info@betek.de
www.betek.de

SIMONGROUP